ARNIKA

Bath mixer, freestanding

Product code: 75980
EAN: 5907650833253
Color: brushed gold
Warranty [years]: 7

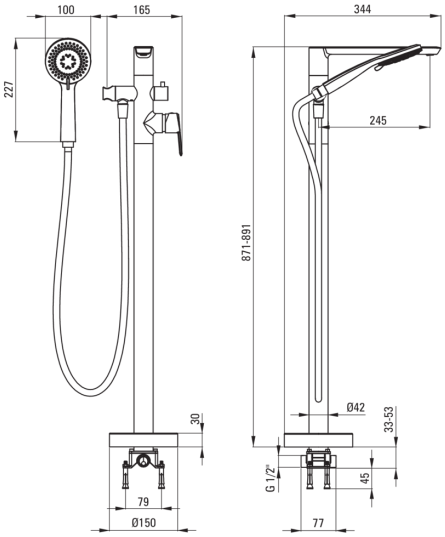

Mixer	
Finish	brushed gold
Mixer type	single-handle, mixer
Installation method	floor
Acoustic group [db]	II (20 < x ≤ 30)
Check valves	Yes
Additional features	adjustable shower head angle
Mixer cartridge	
Ceramic cartridge size	35 mm
Spouts	
Spout type	still
Material	brass
Aerators	
Aerator type	coin-slot
Aerator size	M24
Hoses	
Length [mm]	1500
Braid type	not applicable
Anti-twist	1
Hand showers	
Number of functions	3
Anti-calc	Yes

Features:

- Design full of beauty and harmony
- The variety of colours gives many arrangement possibilities
- Innovative and easy to maintain brushed gold coating
- Coin-slot aerator
- Mechanical ceramic function switch
- Anti-twist system, preventing the hose from twisting
- Anti-calc hand shower
- Only the best materials, the quality of which has been confirmed by laboratory tests
- The offer includes a cleaning agent for fixtures in all colors